SINCE 1986 CROWN LIFTERS™

RT 760

MAX. CAPACITY (Outriggers) - 55.0 Tonnes at 3m Radius (85% Rating) 360° Slew
MAX. CAPACITY (On Tyres) - 29.45 Tonnes at 3m Radius (85% Rating) Over Front
BOOM - 4 SECTION Trapezoidal 10.8m - 33.5m
MAX. ROAD SPEED - 35 km/hr
CARRIER - 4 x 4 Wheel Drive with 4 Wheel Steer

ROUGH-TERRAIN HYDRAULIC CRANE

GROVE by Manitowoc

TIL Tractors India

BOOM
10.8m – 33.5m four section, telescopic, trapezoidal boom comprising one base section, two full power sections and one power pinned section. Telescoping boom sections slide on adjustable and replaceable, low friction wear pads.
Boom Nose – Five nylatron sheaves mounted on heavy duty tapered roller bearings with removable pin-type rope guards.
Maximum Tip Height: 35.7m

BOOM ELEVATION
Dual double acting hydraulic cylinders with integral holding valves.

BOOM ANGLE
Maximum 76°, Minimum -4°

SUPERSTRUCTURE FRAME
Fabricated from high tensile steel plates and sections.

SLEW SYSTEM
Ball bearing swing circle with 360° continuous rotation. Planetary "Glide-Swing" with foot applied multi-disc brake. Spring applied hydraulically released parking brake, mechanical house lock operated from cab. Free slew facility provided.

SLEW SPEED
Maximum 2.0 RPM (Unladen)

HOIST SYSTEM
Power up and down equal speed, grooved drum, planetary reduction with integral automatic spring applied multi-disc brake. Hoist drum fitted with third wrap indicator.

Non spin hoist Rope: 19 mm dia. & length 167 m
Line Speed: 115 m/min (Max) Unladen
Maximum Permissible Line Pull: 5800 kg

HOOK BLOCK
55.0 Tonnes; 5 Sheaves – 10falls

COUNTERWEIGHT
Bolted with superstructure.
Weight - 6427 kg. (w/o swingaway extension)
Weight - 7562 kg. (with swingaway extension)

OPERATOR'S CAB
Totally enclosed steel construction, full vision type cab with joystick control of crane functions, driving controls, engine instrumentation & automotive type steering wheel. All windows fitted with toughened safety glass, lockable sliding door, cab interior light, circulating air fan, pantograph type electric wiper & electric horn.

LMI & A2B SYSTEM
Load Moment Indicator and Anti-Two Block system with audio–visual warning and control lever lock-out provides electronic display of boom angle, boom length, radius, relative load moment, maximum permissible load, load indication and warning of impending two-block condition.

HYDRAULIC CONTROL VALVES
Precision four way double acting pilot operated control valves. Four individual valve banks permit simultaneous control of multiple crane functions.

PRESSURE CHECK PANEL
System pressure test panel with quick release type fittings for each circuit.

OPTIONAL EQUIPMENTS

Fixed Swingaway Extension (4 Section Boom)
9.8m lattice swingaway boom extension stows alongside base boom section when not in use, off settable at 0°, 15° or 30°.
Maximum Tip Height: 44.8m

Telescopic Swingaway Extension (4 Section Boom)
9.8m to 13.4m or 17.1m telescopic lattice swingaway extension with integral offset mechanism, off settable at 0°, 15° or 30°. Stows alongside base boom section when not in use.
Maximum Tip Height: 51.8m

3- Section Boom
10.4m – 25.6m three section trapezoidal full power boom comprising a base section and two full power sections. Telescopic sections slide on adjustable and replaceable low friction wear pads.
Maximum Tip Height: 27.5m

Swingaway Extension (3-Section Boom)
9.8m lattice swingaway boom extension stows alongside base boom section when not in use.
Maximum Tip Height: 37.2m

Jib (3 Section Boom)
7.3m "A"frame jib offsettable at 5°, 17° or 30°

Height of Lift: 3 Section 10.4m - 25.6m Full Power Boom

Tractors India

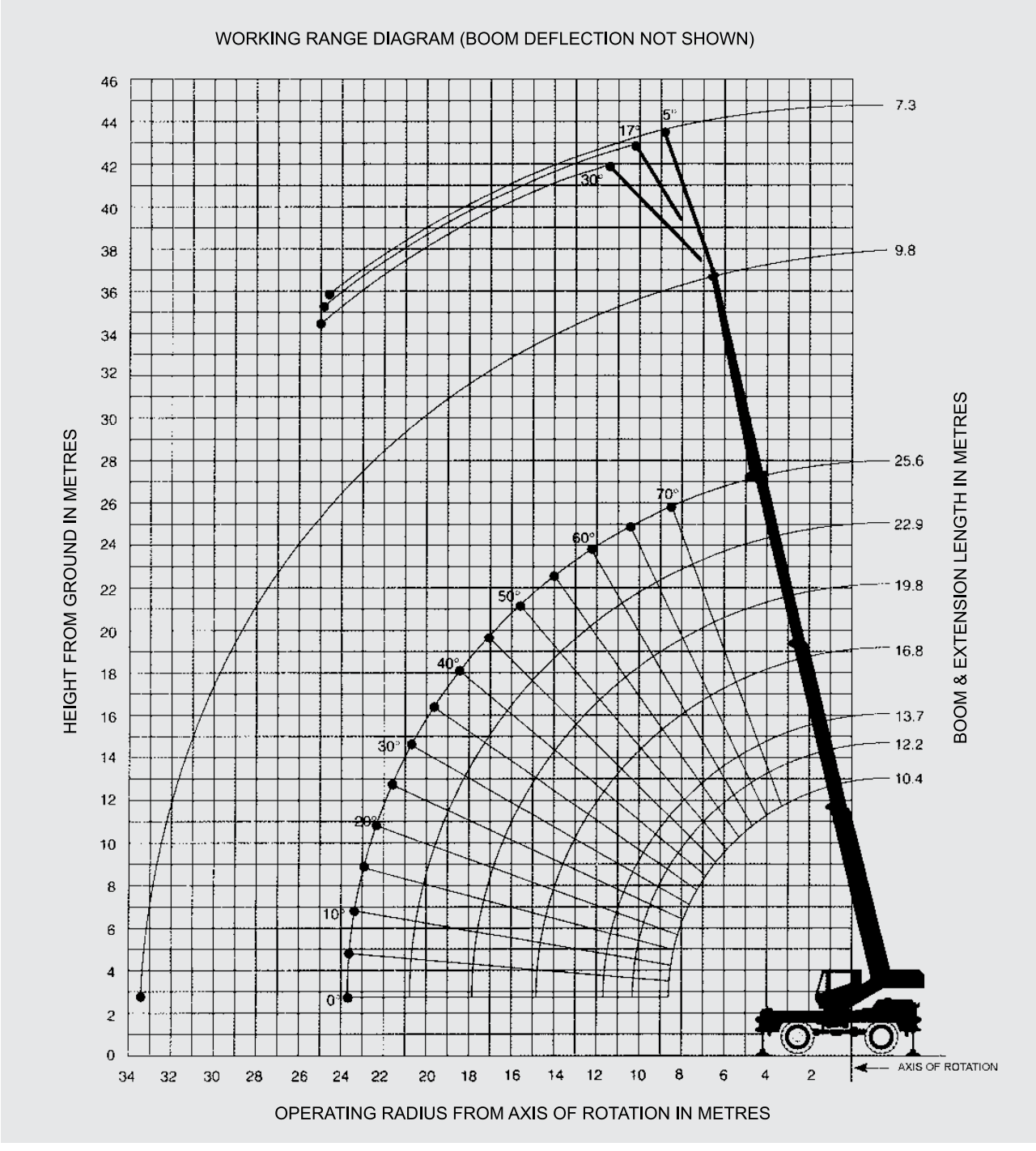

Hookblock Capacities -Tonnes

No. of Falls	10	9	8	7	6	5	4	3	2	1
Permissible Load	55.0	48.0	40.0	34.0	28.0	23.0	18.0	14.0	10.0	5.0

Metric 85% Lifting Capacities (Kilograms) on Outriggers Fully Extended- 3 Section Boom

On Outriggers Fully Extended - 360°

Radius (in Meters)	Main Boom Length (in Meters)							9.8m Extension + 25.6m
	10.4	12.2	13.7	16.8	19.8	22.9	25.6	35.4
3	55,000 (64)	40,820 (68.5)	37,190 (70.5)	36,400 (74.5)				
3.5	46,175 (61)	40,820 (66)	37,190 (68.5)	34,605 (73)	30,390 (76)			
4	42,135 (58)	39,870 (63)	37,190 (66)	32,790 (71)	28,960 (74.5)			
4.5	38,370 (54.5)	38,370 (60.5)	37,190 (63.5)	31,090 (69)	27,010 (73)			
5	35,060 (51)	35,060 (57.5)	35,060 (61)	29,230 (67.5)	25,310 (71.5)			
6	29,640 (43.5)	29,640 (52)	29,640 (56)	25,580 (63.5)	22,475 (68)	19,500 (72)	17,845 (74.5)	
7	24,830 (34)	24,830 (45.5)	24,830 (50.5)	23,040 (59.5)	19,795 (65)	17,345 (69)	16,100 (72)	9,070 (76)
8	21,135 (22)	21,135 (38)	21,135 (44.5)	20,815 (55)	17,530 (61.5)	15,510 (66)	14,310 (69.5)	8,890 (75)
9		18,325 (29.5)	18,325 (38)	18,325 (50.5)	15,785 (58)	14,240 (63.5)	12,790 (67)	8,390 (74)
10		15,785 (17)	15,785 (30)	15,785 (46)	14,330 (54.5)	12,900 (60.5)	11,540 (64.5)	7,960 (72)
12				11,530 (35)	11,530 (47)	10,680 (54.5)	9,615 (59.5)	7,230 (68.5)
14				8,785 (18.5)	8,785 (38)	8,785 (47.5)	8,095 (54)	6,530 (65)
16					6,830 (26)	6,830 (40)	6,830 (48)	5,870 (61.5)
18						5,505 (30.5)	5,505 (41.5)	5,260 (57.5)
20						4,535 (17)	4,535 (34)	4,645 (53.5)
22							3,740 (24)	4,110 (49.5)
24								3,570 (44.5)
26								3,000 (39.5)
28								2,450 (34)
30								1,950 (27.5)
32								1,510 (18.5)
Minimum boom angle (deg.) for indicated length (no load)							0	0
Maximum boom length (m) at 0 deg. boom angle (no load)							25.6	35.4

Note : ( ) Boom angles are in degrees.

No Load Stability on Rubber - 3 Section Boom

	No Load Stability Data	25.6m Main Boom	9.8m Extension & Main Boom
Front (No load)	Min. boom angle (deg.) for indicated length Max. boom length (m) at 0° boom angle	0 25.6	0 35.4
360° (No load)	Min. boom angle (deg.) for indicated length Max. boom length (m) at 0° boom angle	35 21.3	50 25.6

Lifting Capacities on Rubber - 3 Section Boom

Tractors India

On Rubber (Stationary Capacities - 360°)

Radius (in Meters)	Tyre Pr. 5.3 kg/cm²				
	Main Boom Length (in Meters)				
	10.4	12.2	13.7	16.8	19.8
3	25,000				
3.5	22,000	14,400			
4	19,000	13,250			
4.5	14,480	11,750	11,400		
5	12,130	10,000	10,000		
6	8,910	8,250	8,200		
7	6,800	6,780	6,600	5,850	5,800
8	5,280	5,280	5,280	5,280	5,280
9		4,180	4,180	4,180	4,180
10			3,400	3,400	3,400
12				2,300	2,300
14				1,420	1,420
16					880

Notes for Lifting Capacities

WARNING: THIS CHART IS ONLY A GUIDE. The Notes below are for illustration only and should not be relied upon to operate the crane. The individual crane's load chart, operating instructions and other Instruction plates must be read and understood prior to operating the crane.

1. All rated loads have been tested to and meet minimum requirements of IS : 4573-1982 Specification for Power Driven Mobile Cranes, and do not exceed 85% of the tipping load on outriggers (85% of the tipping load on rubber) as determined by SAE J765 OCT80 Crane Stability Test Code.
2. The weight of hookblock, slings and all similarly used load handling devices must be added to the weight of the load. When more than minimum required reeving is used, the additional rope weight shall be considered part of the load.
3. Capacities appearing above the bold line are based on structural strength and tipping should not be relied upon as a capacity limitation.
4. All capacities are for crane on firm, level surface. It may be necessary to have structural supports under the outrigger floats or tyres to spread the load, to a larger bearing surface.
5. When either boom length or radius or both are between values listed, the smallest load shown at either the next larger radius or boom length shall be used.
6. On rubber, lifting with Boom extensions not permitted.
7. Tyres shall be inflated to the recommended pressure before lifting on rubber. Capacities must be reduced for lower tyre inflation. Damaged tyre is hazardous for safe operation of crane.
8. For outrigger operation, all outriggers shall be fully extended with tyres raised free of ground before raising the boom or lifting loads.
9. Unless otherwise stated, capacities are with powered boom sections equally extended.
10. Defined Arc ±6º on either side of longitudinal centerline of machine.
11. For Pick & Carry operation, boom must be centered over front of machine, mechanical swing lock engaged and load restrained from swinging. When handling loads in the structural range with capacities close to max. rating, travel should be reduced to creep speeds (not over 61m of movement in 30 min, not exceeding 1.6 km/hr).
12. Axle lockouts must be functioning before lifting on rubber.
13. The maximum load which can be telescoped is not definable because of variations in loading and crane maintenance, but it is safe to attempt retraction and extension within the limits of the capacity chart.
14. Power telescoping boom sections must be extended equally at all times.
15. For boom lengths less than 35.4m with 9.8m boom extension erected, the rated loads are determined by boom angle only in the column headed by 35.4m boom. For boom angles not shown, use the rating of the next lower boom angle.

WARNING: Operation of the machine with heavier load than the capacities listed is strictly prohibited. Machine tipping occurs without advance warning.

On Rubber (Stationary - Defined Arc Over Front)

Radius (in Meters)	Tyre Pr. 5.3 kg/cm²						
	Main Boom Length (in Meters)						
	10.4	12.2	13.7	16.8	19.8	22.9	25.6
3	29,650						
3.5	25,500	14,400					
4	23,150	13,900					
4.5	21,300	13,900	13,100				
5	19,850	13,900	12,500				
6	17,250	13,900	11,000				
7	13,150	13,150	9,250	8,350	8,350		
8	10,300	10,300	8,100	8,100	7,600		
9		8,300	7,650	7,650	6,350		
10		6,750	6,750	6,750	5,600	5,200	
12				5,000	4,750	4,000	3,850
14				3,500	3,500	3,200	2,825
16					2,600	2,600	2,175
18						1,900	1,800
20						1,350	1,350
22							950

On Rubber (Pick & Carry Capacities - upto 4.0 km/hr Boom Centered Over Front)

Radius (in Meters)	Tyre Pr. 5.3 kg/cm²						
	Main Boom Length (in Meters)						
	10.4	12.2	13.7	16.8	19.8	22.9	25.6
3	24,900						
3.5	21,750						
4	20,300						
4.5	18,500	12,400	12,400				
5	17,000	12,000	11,500				
6	14,650	10,850	9,400	9,250			
7	12,650	9,350	7,850	7,850	7,000	7,000	
8	10,300	8,900	7,350	6,600	6,500	6,300	
9		8,300	7,350	5,600	5,400	5,000	
10		6,750	6,750	5,400	4,700	4,150	3,750
12				5,000	3,750	3,150	3,150
14				3,500	3,200	2,600	2,600
16					2,600	2,300	2,200
18						1,900	1,900
20						1,350	1,350
22							950

Jib Capacities in Kilograms
7.3m "A" Frame Jib

On Outriggers - 360º

Boom Angle	5º Offset	17º Offset	30º Offset
76º	2,720	2,355	2,085
70º	1,950	1,785	1,655
65º	1,660	1,530	1,405
60º	1,405	1,315	1,220
55º	1,175	1,130	1,085
50º	995	950	905

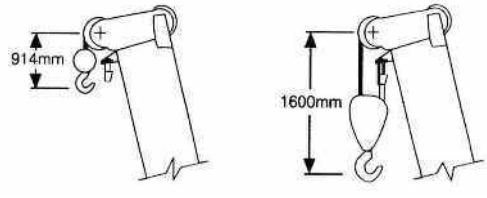

Dimensions are for largest furnished hook block and headache ball with anti-two block activated.

Notes for Jib Capacities

1. All capacities are in kilograms. Capacities are based on structural strength of 7.3 m jib & 9.8 m boom extension combination at given main boom angle regardless of main boom length.
2. WARNING: Operation of machine with heavier loads than the capacities listed is strictly prohibited. Machine tipping with jib occurs rapidly & without advance warning.
3. 7.3 m JIB WARNING: For main boom length greater than 24.2 m with 9.8 m boom extension & 7.3 m jib in working position, the boom angle must not be less than 45º since loss of stability will occur causing a tipping condition. The boom angle is not restricted for main boom length equal to or less than 24.2 m. This warning applies for jib erection purpose also.
4. WARNING: Lifting on rubber with 9.8 m boom extension or 7.3 m jib & 9.8 m boom extension combination is prohibited.

Hookblocks and Headache Ball for 4 Sec. & 3 Sec. Boom	
55 MT, 5 Sheave	800 kg.
15 MT, 1 Sheave	418 kg.
Headache Ball	227 kg.

Note: MT refers to metric tonne

Note: When lifting over swingaway and/or jib combinations, deduct total weight of all load handling devices reeved over main boom nose directly from swingaway or jib capacity.

Weight Reductions for Load Handling Devices - 3 Section Boom

9.8m Boom Extension	
*Stowed	213 kg.
*Erected	1,473 kg.
7.3m Jib & 9.8m Boom Extension Combination	
*Stowed	271 kg.
*Erected	3,192 kg.
**Erected	746 kg.

*Reduction of main boom capacities
**Reduction of 9.8m Extension capacities

Weight Reductions for Load Handling Devices - 4 Section Boom

9.8m Boom Extension	
*Stowed	422 kg.
*Erected	2,503 kg.
9.8m - 17.1m Tele Boom Extension	
*Stowed	528 kg.
*Erected (Retracted)	3,173 kg.
*Erected (Extended)	4,057 kg.

*Reduction of main boom capacities

Height of Lift: 4 Section 10.8m - 33.5m Power Pinned Boom

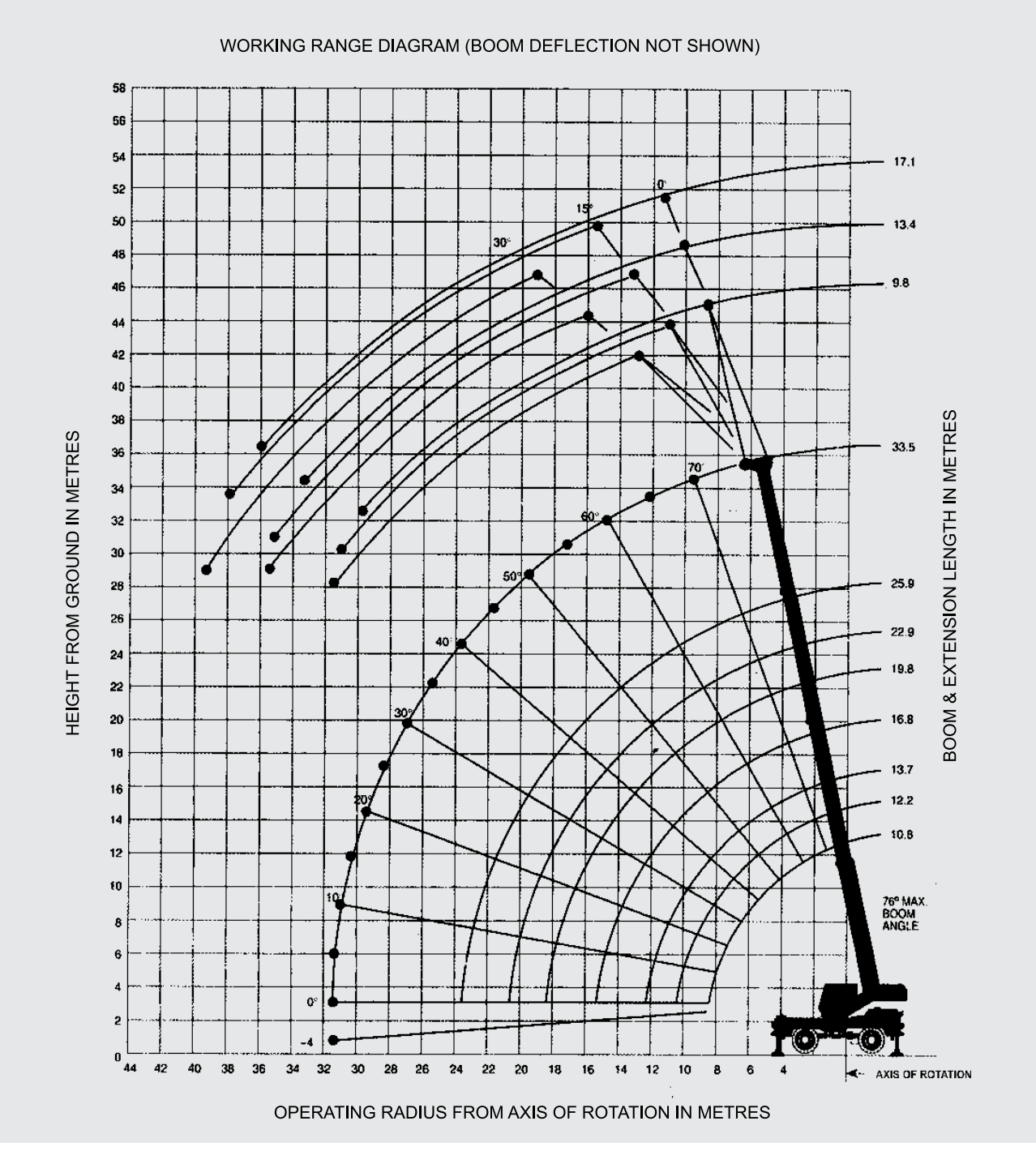

Hookblock Capacities -Tonnes

No. of Falls	10	9	8	7	6	5	4	3	2	1
Permissible Load	55.0	48.0	40.0	34.0	28.0	23.0	18.0	14.0	10.0	5.0

Metric 85% Lifting Capacities (Kilograms) on Outriggers Fully Extended- 4 Section Boom

RT 760

Main Boom - 360°

Radius (in Meters)	Main Boom Length in Meters (Power Pinned Fly Retracted)							Power Pin. Fly Ext. & 25.9m
	10.8	12.2	13.7	16.8	19.8	22.9	25.9	33.5
3	55,000 (65)	40,820 (68.5)						
3.5	46,175 (62)	40,820 (66)						
4	42,135 (59)	39,870 (63)	37,190 (66.5)	32,790 (71.5)	28,960 (75)			
4.5	38,370 (56)	38,370 (60.5)	37,190 (64.5)	31,090 (69.5)	27,010 (73.5)			
5	35,060 (52.5)	35,060 (57.5)	35,060 (62)	29,230 (68)	25,310 (72)			
6	29,640 (45.5)	29,640 (52)	29,640 (57)	25,580 (64)	22,475 (69)	19,500 (72)	17,845 (75)	
7	24,830 (37)	24,830 (45.5)	24,830 (51.5)	23,040 (60)	19,795 (65.5)	17,345 (69.5)	16,100 (72.5)	12,290 (76)
8	21,135 (26.5)	21,135 (38)	21,135 (46)	20,815 (56)	17,530 (62.5)	15,510 (67)	14,310 (70)	11,860 (75.5)
9		18,325 (29.5)	18,325 (40)	18,325 (51.5)	15,785 (59)	14,240 (64)	12,790 (68)	10,770 (74)
10		15,965 (17)	15,965 (32.5)	15,965 (47)	14,330 (55.5)	12,900 (61)	11,540 (65.5)	9,865 (72)
12				12,080 (36.5)	11,900 (48)	10,680 (55)	9,615 (60.5)	8,435 (68.5)
14				8,890 (21.5)	8,890 (39)	8,890 (48.5)	8,095 (55)	7,300 (64.5)
16					7,020 (28)	7,010 (41)	6,900 (49)	6,330 (60.5)
18						5,750 (32.5)	5,750 (42.5)	5,510 (56.5)
20						4,690 (20)	4,700 (35)	4,830 (52)
22							3,700 (26)	4,150 (47.5)
24								3,500 (42.5)
26								2,940 (37)
28								2,680 (30)
30								2,160 (21.5)
Minimum boom angle (deg.) for indicated length (no load)							0	0
Maximum boom length (m) at 0 deg. boom angle (no load)							25.9	33.5

Note : ( ) Boom angles are in degrees.

9.8m Swingaway - 360°

Main Boom Angle (Deg.)	0° Offset		15° Offset		30° Offset	
	Rad. Ref. m	Cap Kg.	Rad. Ref. m	Cap Kg.	Rad. Ref. m	Cap Kg.
Power Pinned Fly Retracted						
75°	8.1	9,340	10.1	7,075	11.6	4,805
70°	11.0	7,935	12.9	5,940	14.2	4,395
65°	13.8	6,845	15.5	5,215	16.8	4,035
60°	16.5	5,985	18.0	4,625	19.2	3,715
55°	19.0	5,125	20.4	4,035	21.5	3,310
50°	21.5	4,180	22.6	3,535	23.6	2,945
45°	23.7	3,245	24.6	2,985	25.5	2,585
Power Pinned Fly Extended						
75°	11.2	5,665	12.7	4,395	14.3	3,670
70°	14.7	4,985	16.1	4,035	17.6	3,445
65°	18.0	4,215	19.4	3,625	20.8	3,220
60°	21.3	3,760	22.6	3,265	23.7	2,990
55°	24.4	3,355	25.5	2,945	26.5	2,765
50°	27.3	2,755	28.3	2,535	29.1	2,395
45°	30.0	2,060	30.8	1,915	31.5	1,830

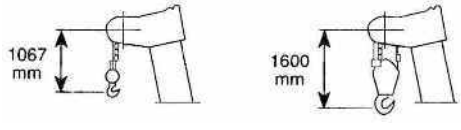

Dimensions are for largest furnished hook block and headache ball with anti-two block activated.

9.8m - 17.1m Tele Swingaway - 360°

Main Boom Angle (Deg.)	9.8m Extension						13.4m Extension						17.1m Extension					
	0° Offset		15° Offset		30° Offset		0° Offset		15° Offset		30° Offset		0° Offset		15° Offset		30° Offset	
	Rad. Ref. m	Cap Kg.	Rad. Ref. m	Cap Kg.	Rad. Ref. m	Cap Kg.	Rad. Ref. m	Cap Kg.	Rad. Ref. m	Cap Kg.	Rad. Ref. m	Cap Kg.	Rad. Ref. m	Cap Kg.	Rad. Ref. m	Cap Kg.	Rad. Ref. m	Cap Kg.
Power Pinned Fly Retracted																		
75°	8.1	9,070	10.1	6,800	11.6	4,535	9.5	5,895	12.3	3,900	14.8	2,855	10.8	4,080	14.7	3,035	17.8	2,130
70°	11.0	7,665	12.9	5,665	14.2	4,125	12.7	5,125	15.5	3,535	17.7	2,630	14.2	3,445	18.0	2,675	20.8	1,905
65°	13.8	6,575	15.5	4,940	16.8	3,760	15.8	4,535	18.4	3,175	20.4	2,400	17.6	2,945	21.2	2,400	23.7	1,765
60°	16.5	5,665	18.0	4,305	19.2	3,400	18.8	3,990	21.2	2,855	23.0	2,310	20.8	2,540	24.3	2,130	26.4	1,675
55°	19.0	4,895	20.4	3,760	21.5	3,035	21.7	3,445	23.9	2,585	25.4	2,220	23.9	2,130	27.1	1,905	28.9	1,585
50°	21.5	3,960	22.6	3,265	23.6	2,675	24.4	3,080	26.4	2,400	27.6	2,130	26.7	1,905	29.7	1,720	31.2	1,540
45°	23.7	3,030	24.6	2,775	25.5	2,310	26.9	2,635	28.7	2,265	29.6	2,040	29.4	1,765	32.1	1,675	33.2	1,495
Power Pinned Fly Extended																		
75°	11.2	5,395	12.7	4,125	14.3	3,400	12.8	4,080[1]	16.2	3,355	18.3	2,540	14.5	3,175[2]	18.6	2,765	21.1	1,995
70°	14.7	4,715	16.1	3,760	17.6	3,175	16.6	3,990	19.8	2,990	21.6	2,355	18.5	3,125	22.3	2,445	24.7	1,810
65°	18.0	3,945	19.4	3,355	20.8	2,945	20.2	3,445	23.3	2,675	24.8	2,130	22.5	2,585	25.9	2,175	28.1	1,720
60°	21.3	3,445	22.6	2,945	23.7	2,675	23.8	2,900	26.5	2,445	27.9	2,085	26.2	2,265	29.3	1,950	31.3	1,630
55°	24.4	3,125	25.5	2,675	26.5	2,490	27.4	2,540	29.7	2,175	30.7	1,905	29.7	1,905	32.4	1,675	34.3	1,495
50°	27.3	2,530	28.3	2,315	29.1	2,180	30.3	2,220	32.6	1,905	33.2	1,765	33.1	1,675	35.4	1,495	37.0	1,405
45°	30.0	1,830	30.8	1,695	31.5	1,610	33.2	1,625	35.2	1,475	35.5	1,385	36.2	1,455	38.0	1,295	39.4	1,210

[1] If 2 parts of line are used, the capacity increases to 4,625 kg.
[2] If 2 parts of line are used, the capacity increases to 3,810 kg.

Lifting Capacities on Rubber- 4 Section Boom

Tractors India

On Rubber (Stationary Capacities - 360°)

Radius (in Meters)	Tyre Pr. 5.3 kg/cm²			
	Main Boom Length (in Meters)			
	10.8	12.2	13.7	16.8
3	26,000 (65)	17,000 (68.5)		
3.5	22,750 (62)	15,000 (66)	14,500 (69)	
4	19,820 (59)	13,000 (63)	13,000 (66.5)	
4.5	17,480 (56)	11,500 (60.5)	11,500 (64.5)	11,250 (69.5)
5	14,780 (52.5)	10,250 (57.5)	10,250 (62)	10,000 (68)
6	10,640 (45.5)	8,000 (52)	8,000 (57)	8,000 (64)
7	8,430 (37)	6,430 (45.5)	6,400 (51.5)	6,400 (60)
8	6,480 (26.5)	6,430 (38)	5,200 (46)	5,190 (56)
9		4,980 (29.5)	4,970 (40)	4,240 (51.5)
10		3,900 (17)	3,890 (32.5)	3,450 (47)
12				2,400 (36.5)
14				1,440 (21.5)

Notes for Lifting Capacities

WARNING: THIS CHART IS ONLY A GUIDE. The Notes below are for illustration only and should not be relied upon to operate the crane. The individual crane's load chart, operating instructions and other Instruction plates must be read and understood prior to operating the crane.

1. All rated loads have been tested to and meet minimum requirements of IS : 4573-1982 Specification for Power Driven Mobile Cranes, and do not exceed 85% of the tipping load on outriggers (85% of the tipping load on rubber) as determined by SAE J765 OCT80 Crane Stability Test Code.
2. The weight of hookblock, slings and all similarly used load handling devices must be added to the weight of the load. When more than minimum required reeving is used, the additional rope weight shall be considered part of the load.
3. Capacities appearing above the bold line are based on structural strength and tipping should not be relied upon as a capacity limitation.
4. All capacities are for crane on firm, level surface. It may be necessary to have structural supports under the outrigger floats or tyres to spread the load, to a larger bearing surface.
5. When either boom length or radius or both are between values listed, the smallest load shown at either the next larger radius or boom length shall be used.
6. On rubber, lifting with Boom extensions not permitted.
7. Tyres shall be inflated to the recommended pressure before lifting on rubber. Capacities must be reduced for lower tyre inflation. Damaged tyre is hazardous for safe opeartion of crane.
8. For outrigger operation, all outriggers shall be fully extended with tyres raised free of ground before raising the boom or lifting loads.
9. Unless otherwise stated, capacities are with powered boom sections equally extended.
10. Defined Arc ±6º on either side of longitudinal centerline of machine.
11. With tele boom extension in working position and main boom length greater than 29.3m boom angle must not be less than 30º, since loss of stability will occur causing a tipping condition.
12. For Pick & Carry operation, boom must be centered over front of machine, mechanical swing lock engaged and load restrained from swinging. When handling loads in the structural range with capacities close to max. rating, travel should be reduced to creep speeds (not over 61m of movement in 30 min, not exceeding 1.6 km/hr).
13. Axle lockouts must be functioning before lifting on rubber.
14. The maximum load which can be telescoped is not definable because of variations in loadings and crane maintenance, but it is safe to attempt retraction and extension within the limits of the capacity chart.
15. Power telescoping boom sections must be extended equally at all times.

On Rubber (Stationary - Defined Arc Over Front)

Radius (in Meters)	Tyre Pr. 5.3 kg/cm²					
	Main Boom Length (in Meters)					
	10.8	12.2	13.7	16.8	19.8	22.9
3	29,450 (65)	20,600 (68.5)				
3.5	24,700 (62)	18,500 (66)	17,800 (69)			
4	21,500 (59)	16,500 (63)	16,500 (66.5)			
4.5	19,100 (56)	14,800 (60.5)	14,850 (64.5)	14,600 (69.5)		
5	17,350 (52.5)	13,400 (57.5)	13,400 (62)	13,400 (68)		
6	14,400 (45.5)	11,100 (52)	11,100 (57)	11,100 (64)		
7	12,000 (37)	10,300 (45.5)	9,300 (51.5)	9,300 (60)		
8	10,400 (26.5)	10,300 (38)	8,950 (46)	7,900 (56)		
9		8,950 (29.5)	8,950 (40)	6,750 (51.5)		
10		7,250 (17)	7,250 (32.5)	5,800 (47)	5,200 (55.5)	
12				5,100 (36.5)	4,300 (48)	
14				3,500 (21.5)	3,200 (39)	
16					2,450 (28)	
18						1,600 (32.5)
20						1,000 (20)

On Rubber (Pick & Carry Capacities - upto 4.0 km/hr Boom Centered Over Front)

Radius (in Meters)	Tyre Pr. 5.3 kg/cm²					
	Main Boom Length (in Meters)					
	10.8	12.2	13.7	16.8	19.8	22.9
3	20,400 (65)	19,500 (68.5)	19,500 (71)			
3.5	18,800 (62)	17,550 (66)	17,550 (69)			
4	16,600 (59)	15,700 (63)	15,700 (66.5)			
4.5	15,200 (56)	14,200 (60.5)	14,200 (64.5)	13,900 (69.5)		
5	14,100 (52.5)	12,850 (57.5)	12,850 (62)	12,850 (68)		
6	13,800 (45.5)	10,700 (52)	10,700 (57)	10,700 (64)	10,500 (69)	10,500 (72)
7	11,300 (37)	9,000 (45.5)	9,000 (51.5)	9,000 (60)	9,000 (65.5)	9,000 (69.5)
8	10,250 (26.5)	8,800 (38)	7,700 (46)	7,700 (56)	7,700 (62.5)	7,700 (67)
9		8,800 (29.5)	6,600 (40)	6,600 (51.5)	6,600 (59)	6,600 (64)
10		7,100 (17)	5,650 (32.5)	5,650 (47)	5,650 (55.5)	5,650 (61)
12				5,060 (36.5)	4,200 (48)	4,200 (55)
14				3,500 (21.5)	3,150 (39)	3,150 (48.5)
16					2,400 (28)	2,300 (41)
18						1,600 (32.5)
20						1,000 (20)

Note : ( ) Boom angles are in degrees.

Zero Degree Boom Angle Charts - 4 Section Boom

On Outriggers - 360°

Boom Angle	Main Boom Length (in Meters)							
	10.8	12.2	13.7	16.8	19.8	22.9	25.9	33.5
0º	11,125 (9.0)	9,335 (10.4)	7,800 (12.0)	5,610 (15.0)	4,095 (18.1)	2,985 (21.1)	2,140 (24.1)	1,325 (31.7)

On Rubber Stationary Capacity- Defined Arc Over Front

Boom Angle	Tyre Inflation Pr. 5.3 kg/cm^2					
	Main Boom Length (in Meters)					
	10.8	12.2	13.7	16.8	19.8	22.9
0º	8,940 (9.0)	6,750 (10.4)	5,195 (12.0)	3,170 (15.0)	1,800 (18.1)	900 (21.1)

On Rubber Stationary Capacity - 360º Arc

Boom Angle	Tyre Inflation Pr. 5.3 kg/cm^2			
	Main Boom Length (in Meters)			
	10.8	12.2	13.7	16.8
0º	4,640 (9.0)	3,400 (10.4)	2,425 (12.0)	1,120 (15.0)

On Rubber Pick & Carry Capacities Upto 4.0 km/hr Boom Centered Over Front

Boom Angle	Tyre Inflation Pr. 5.3 kg/cm^2					
	Main Boom Length (in Meters)					
	10.8	12.2	13.7	16.8	19.8	22.9
0º	8,940 (9.0)	6,640 (10.4)	5,195 (12.0)	3,170 (15.0)	1,800 (18.1)	900 (21.1)

Note: ( ) Reference radii in meters

No Load Stability on Rubber - 4 Section Boom

	No Load Stability Data	Main Boom Fly Retracted
Front (No load)	Min. boom angle (deg.) for indicated length	13
	Max. boom length (m) at 0° boom angle	25.3
360° (No load)	Min. boom angle (deg.) for indicated length	44
	Max. boom length (m) at 0° boom angle	18.3

Carrier Specification

Tractors India

FRAME
High strength alloy steel welded box section with integral outrigger housings and front / rear lifting, towing and tie down lugs.

OUTRIGGER SYSTEM
4 hydraulically telescoping beams with jacks having integral holding valves, positioned 2 nos. in each outrigger housing. Provides steel fabricated quick release type outrigger float for each jack .

OUTRIGGER CONTROLS
Independent control of each outrigger beam located in cab on front dash panel along with level indicator.

ENGINE
Suitable water cooled diesel engine of adequate horsepower.

FUEL TANK
Capacity 227 liters.

ELECTRICAL SYSTEM
Two 12 Volt-batteries, 12 Volt lighting equipment including two headlights, side, tail and stop lights and flashing direction indicators.

DRIVE
4x4 / 4x2

STEERING
Fully independent power steering :
Front : Full hydraulic controlled by steering wheel.
Rear : Full hydraulic selector switch controlled.
Provides infinite variations of 4 main steering modes – front only, rear only, crab and coordinated.
Provides rear wheel steer indicator.

Steering Reversal : Provided to have same conventional steering control effect, irrespective of super position with respect to carrier.

TRANSMISSION
Engine mounted full power shift with 6 forward and 6 reverse speeds. Provides front axle disconnect for 4 x 2 travel.

AXLES
Front: Drive-steer with differential and planetary reduction hubs, rigidly mounted to the chassis frame.
Rear: Drive-steer with differential and planetary reduction hubs, pivot mounted at centre of the chassis frame.

OSCILLATION LOCKOUTS
Automatic full hydraulic lockouts on rear axle permits oscillation only with boom centered over front.

TYRES
29.5 X 25 X 28 PR – E3 Tread earthmover tyres.

BRAKES
Dual braking system, full hydraulic operating on all wheels. Spring applied, hydraulically released parking brake operating on front axle.

HYDRAULIC SYSTEM
Pumps : 3-Section Gear pump & Single section Gear pump are driven through transmission PTO.
One Gear pump driven through engine PTO.
Filters : Return line filter with replaceable cartridge having full flow with by-pass protection and service indicator.
Reservoir : 583 liters with spin-on breather filter, external sight gauge, oil level & temperature gauge, clean out access.
Oil cooler : Remote mounted with thermostatically controlled through 2 nos. electric motor driven fan.

MAXIMUM SPEED
35 kmph.

GRADEABILITY
45% (Maximum)

GROSS VEHICLE WEIGHT AND AXLE LOADS (approx)
Front : 20,777 kgs
Rear : 20,448 kgs
GVW : 41,225 kgs

MISCELLANEOUS STANDARD EQUIPMENT
Full width steel fenders, rear view mirror, back-up alarm, front stowage well, tool kit.

OPTIONAL EQUIPMENTS
AC Cab
360° Beacon lights
Cab Spot light
Spare wheel assembly (loose supply)
Fire Extinguisher
Fire Suppression system
Centralized Lubrication system
Tow Hook
Auxiliary Hoist

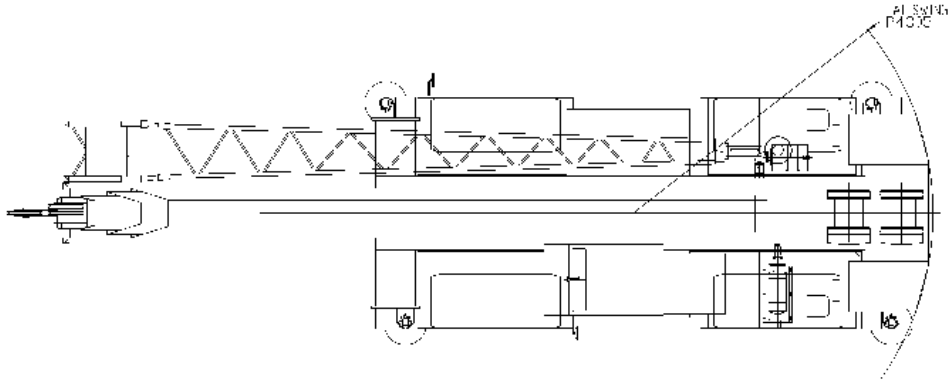

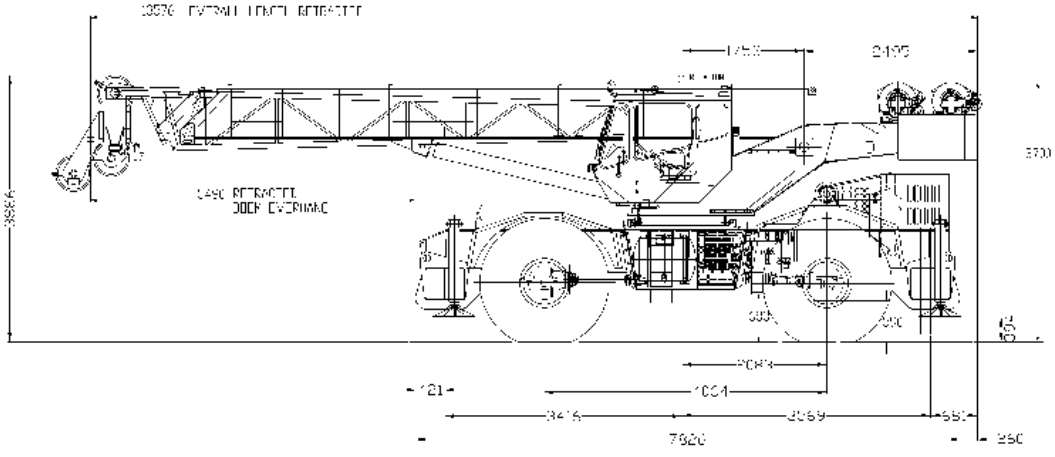

Outrigger Span
Lateral: 7010 mm
Longitudinal: 6985 mm

Turning Radius:
2 wheel steer: 11786 mm
4 wheel steer: 6743 mm

Clearance circle radius
Only Boom
2 Wheel steer: 14173 mm
4 Wheel steer: 9957 mm

Boom with lattice
2 Wheel steer: 14783 mm
4 Wheel steer: 10465 mm

Dimensions in mm

Constant improvement and engineering progress make it necessary that we reserve the right to make specification, equipment and price changes without notice. The photographs/drawings in this document are just for Illustrative purpose which may include optional equipment and accessories, which can be provided at an additional cost on request.

TIL Limited
CIN: L74999WB1974PLC041725
Registered & Corporate Office:
1, Taratolla Road, Garden Reach, Kolkata – 700024
Phone: + 91 33 2469 3732-6, 6497 | 6633 2000, 2845, Fax: + 91 33 2469 2143, 3731
Email: mhg_er@tilindia.com, Website: www.tilindia.in

TIL Tractors India

CHENNAI
Jhaver Plaza, 7th floor
1-A, Nungambakkam High Road,
Chennai 600 034, Tamil Nadu, India
Tel: 91-44- 6670 3000/3010
Fax: 91-44-2827 9681
Email: Chennai.TIL@tilindia.com

DELHI
Plot No.11, Site No.4, Industrial Area
Sahibabad- 201 010
Dist. Ghaziabad, U.P. India
Tel: 91-120-665 9000
Fax: 91-120-277 0365
Email: MhgMarketing.Sahibabad@tilindia.com
mhssales.nr@tilindia.com

KAMARHATTY
517, Barrackpore Trunk Road
Kolkata 700 058, West Bengal
Phone: + 91 33 2553 1352, 1882
+ 91 33 6633 4000
Fax: + 91 33 2553 2546, 5971
Email: mktdept.kmt@tilindia.com

KHARAGPUR
Vill. & P.O. Changual, Kharagpur
Dist. Paschim Medinipur 721 301
West Bengal
Phone: + 91 3222 661050
Email (MHS): sales.mhs@tilindia.com
(EPS): mktg.nbs@tilindia.com

MUMBAI
502-A, 5th Floor, Western Edge
Tower No.1, Western Express Highway
Datta Pada Road, Borivali-East
Mumbai 400 066
Tel: 91-022-6147 9191
Fax: 91-022-6643 0904
Email: mumbai.til@tilindia.com

Toll Free No: 1800 266 1535

Technical Specification TIL/RT760/0516. This cancels Technical Specification TIL/RT760/0914

Copyright © 2016 TIL Limited. All Rights Reserved